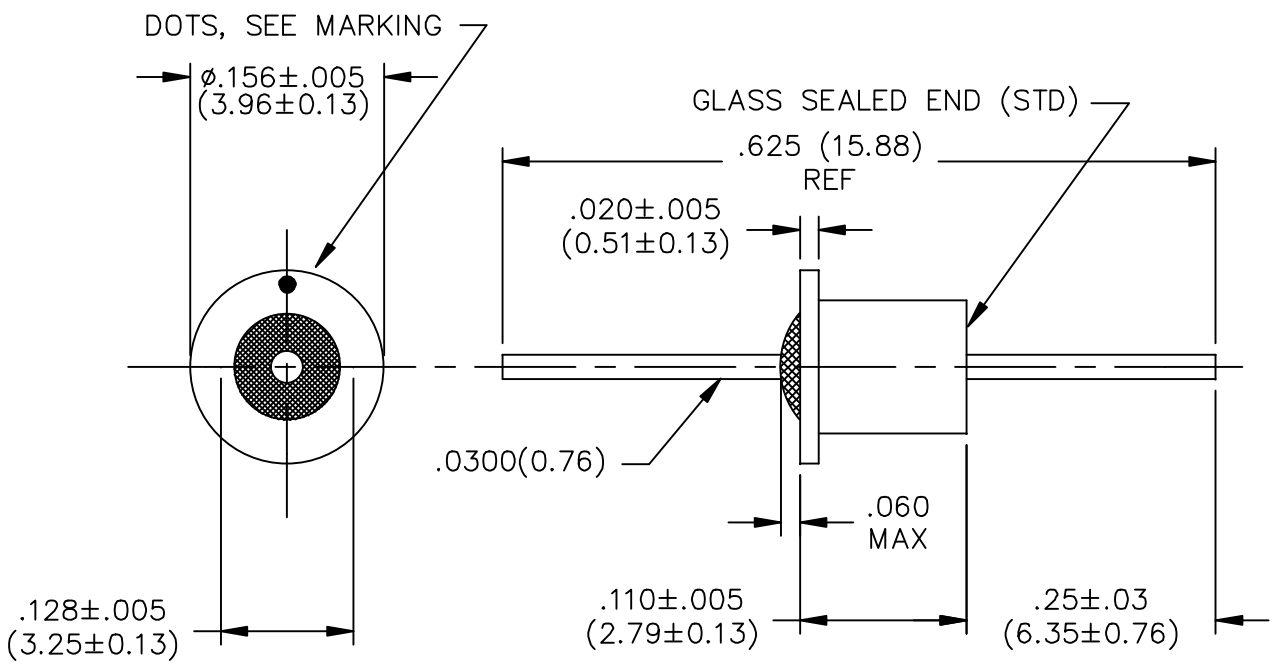

LEAD FINISH: GOLD PL.	
CASING FINISH: GOLD PL.	
CAPACITANCE	.015uF
TEMP. RANGE	-55°C TO 125°C
CURRENT	5 AMP MAX.
WORKING VOLTAGE	85°C -- VDC MAX. 125°C 50VDC MAX.
D.C. RESISTANCE	.01ohms MAX.
MIN. I.L. PER MIL-STD-220 AT 25°C NO LOAD	
FREQ. MHz	I.L. (db)
1	7
10	25
100	40
1 GHz	60
10 GHz	60

SCHEMATIC

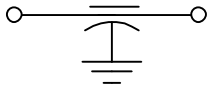

MARKING:

PART: COLOR DOT:
PINK

BAG: SCI-9900-153
XXXX DATE CODE
LOT NO.
QTY./BAG (200 MAX.)

08

RoHS compliant

NOTES:
1. SUGGESTED MOUNTING HOLE = ø.130

REV. NO.	CHANGE NOTICE
8	CN 61937-ENG
7	CN. 200291 REDRAWN
6	CN. 199637
5	CN. 185018 REDRAWN

TOLERANCES UNLESS OTHERWISE SPECIFIED
Fractions ± 1/64
Dec. .xx±
Dec. .xxx±.005
Angles ±0° 30′
CODE IDENT. NO. OLSP2

SPECTRUM CONTROL INC.
FAIRVIEW PENNSYLVANIA

Dwn. KRDZALIC
Date 12-30-11
Apvd.
Scale NONE

Description
FEEDTHRU FILTER
SCI-9900-153